Solenoid Operated Poppet Type Two-Way Valves

These valves are used for opening/closing the oil path by having the poppet valve operated with an electric signal via solenoid. Because these are of poppet type, the internal leakage is quite small and there is no worry about hydraulic lock.

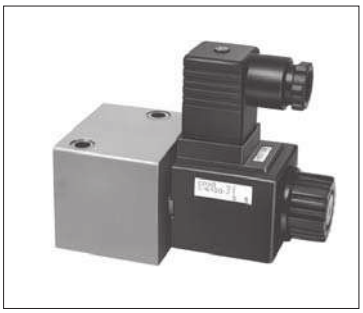

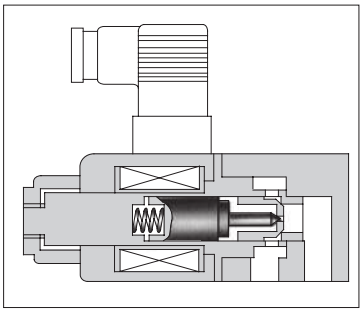

Specifications

Model Numbers	Max. Flow★1 L/min (U.S.GPM)	Max. Operating Pressure MPa (PSI)	Internal leakage cm^3/min (cu.in./min)	Max. Changeover Frequency min^{-1} (Cycles/Min)	Approx. Mass kg(1bs.)
CDSC-01-C-D24-10∗	15 (4.0)	21 (3050)★2	or less 0.25 (.015)	240	0.35 (.8)
CDSC-03-C-∗-21∗	50 (13.2)	14 (2030)	or less 0.25 (.015)	AC: 300 DC: 240 R: 120	0.5 (1.1)
CDST-$^{03W}_{03}$-C-∗-21∗					0.85 (1.9)
CDSG-03-C-∗-21∗					0.85 (1.9)

★ 1. The maximum flow means the limited flow without inducing any abnormality to the operation (changeover) of the valve.
★ 2. When the valve is operated at 18.5 Mpa (2680 PSI) or higher pressure, continuous energies time is restricted with Max. 30 min., and also the energies ratio less than 90 %.

Solenoid Ratings

Electric Source	Coil Type	Frequency (Hz)	Voltage (V)		Current & Power at Rated Voltage		
			Source Rating	Serviceable Range	Inrush (A)	Holding (A)	Power (W)
AC	A100	50	100	80 - 100	1.12	0.55	—
		60	100	90 - 120	0.95	0.40	
			110		0.86	0.36	
	A120	50	120	96 - 132	0.93	0.46	
		60		108 - 144	0.79	0.33	
	A200	50	200	160 - 220	0.56	0.28	
		60	200	180 - 240	0.48	0.20	
			220		0.43	0.18	
	A240	50	240	192 - 264	0.47	0.23	
		60		216 - 288	0.40	0.17	
DC (K Series)	D12	—	12	10.8 - 13.2	—	2.20	26
	D24 ★		24	21.6 - 26.4		1.10	
	D48		48	43.2 - 52.8		0.55	
AC→DC Rectified	R100	50/60	100	90 - 110	—	0.30	26
	R200		200	180 - 220		0.15	

★ CDSC-01 is available with coil type "D24" only.
- Because both AC and DC solenoids employ the plug-in type electrical wiring, the valve can be removed without removing the wiring. (Coil type of CDSC-01 is flying lead wire only.)
- Being 50-60 Hz common service AC solenoids, do not require rewiring when the applied frequency is changed.
- K-Series DC Solenoid which has a reputation for excellent DC control is employed. (Coil type of CDSC-01 is with Surge Suppressor.)

Graphic Symbol

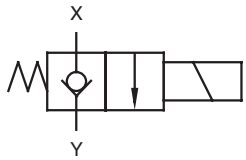

Instructions

- **Direction of flow when the solenoid is energised**

  These valves do not allow flow from Y to X when the solenoid is energised.

- **At the time of test run**

  At the time of test run, there is a possibility that the oil may not flow even after the solenoid is energised because of the residual air in the valve.

- **Mounting**

  There are no mounting restrictions for any models.

Model Number Designation

F-	CDS	T	-03	-C	-D12	-21	∗
Special Seals	Series Number	Type of Connection	Valve Size	Valve Type	Coil Type	Design Number	Design Standard
F: Special seals for phosphate ester type fluids (Omit if not required)	CDS: Solenoid Operated Poppet Type Two-Way Valves	C: Cartridge Type	01	C: Normally Closed	DC D24	10	None: Japanese Std. "JIS" & European Design Std. 90: N. American Design Std.
			03		AC A100, A120 A200, A240 DC D12, D24, D100 AC→DC Rectified R100, R200	21	
		T: Threaded Connection	03W (Piping Size 1/4) 03 (Piping Size 3/8)			21	None: Japanese Std. "JIS" 80: European Design Std. 90: N. American Design Std.
		G: Gasket Mounting	03			21	None: Japanese Std. "JIS" & European Design Std. 90: N. American Design Std.

Mounting Bolts

Mounting bolt in the table below is attached only for Gasket mounting type valve (CDSG-03).

Valve Model Numbers	Socket Head Cap Screws (2pcs.)	
	Japanese Standard "JIS European Design Standard	N. American Design Standard
CDSG-03	M6 × 60 Lg.	1/4-20 UNC × 2-1/4Lg.

Pressure Drop

CDSC-01

Hydraulic Fluid: Viscosity 30 mm² (141 SSU), Specific Gravity 0.850

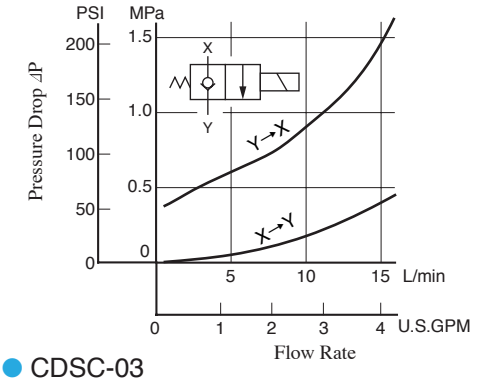

- For any other viscosity, multiply the factors in the table below.

Viscosity	mm²/s	15	20	30	40	50	60	70	80	90	100
	SSU	77	98	141	186	232	278	324	371	417	464
Factor		0.84	0.91	1.00	1.07	1.14	1.19	1.24	1.28	1.32	1.35

- For any other specific gravity (G'), the pressure drop (⊿P') may be obtained from the formula below.

  ⊿P' = ⊿P (G'/0.850)

CDSC-03
CDST-03
CDSG-03

Hydraulic Fluid: Viscosity 35 mm² (164 SSU), Specific Gravity 0.850

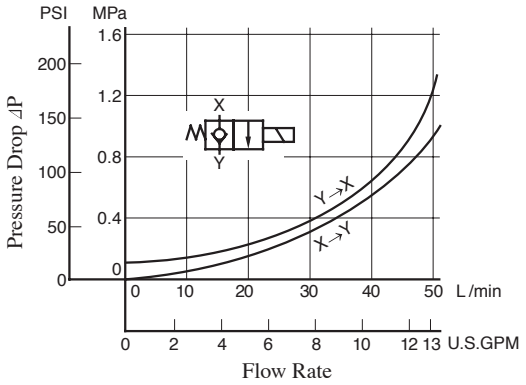

CDST-03W

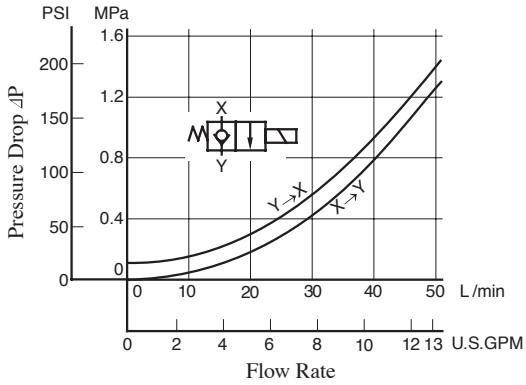

Note: Measuring has been made for the CDSC-03 (Cartridge type) when it is equipped with the same body as the threaded connections and the gasket mounting type.

- For any other viscosity, multiply the factors in the table below.

Viscosity	mm²/s	15	20	30	40	50	60	70	80	90	100
	SSU	77	98	141	186	232	278	324	371	417	464
Factor		0.81	0.87	0.96	1.03	1.09	1.14	1.19	1.23	1.27	1.30

- For any other specific gravity (G'), the pressure drop (⊿P') may be obtained from the formula below.

  ⊿P' = ⊿P (G'/0.850)

Changeover Time

Changeover time, T_2 and T_4, in particular, varies according to the hydraulic circuit and operating conditions. As an example, the following figures show how the measurement is made.

Test Circuit

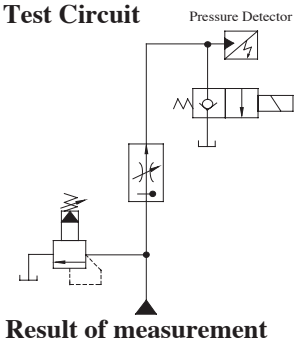

Result of measurement

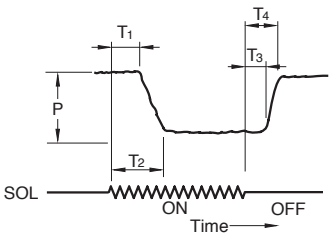

Model Number	Solenoid Types	Condition: Pressure "P" MPa (PSI)	Condition: Flow Rate L/min (U.S.GPM)	Shifting time (ms): SOL "ON"(Open→Close) T_1	SOL "ON"(Open→Close) T_2 (ex.)	SOL "OFF"(Open→Close) T_3	SOL "OFF"(Open→Close) T_4 (ex.)
CDSC-01	DC	10 (1450)	15 (4.0)	21.4	44.0	29.0	38.4
		21 (3050)	15 (4.0)	30.6	47.0	27.0	44.0
CDS✻-03	AC	7 (1020)	50 (13.2)	10.0	86.0	20.0	44.0
		14 (2030)	50 (13.2)	11.0	43.0	12.0	54.0
	DC	7 (1020)	50 (13.2)	22.0	104.0	44.0	66.0
		14 (2030)	50 (13.2)	24.0	60.0	41.0	73.0
	AC→DC Rectified	7 (1020)	50 (13.2)	27.0	100.0	114.0	146.0
		14 (2030)	50 (13.2)	32.0	66.0	108.0	142.0

CDSC-01-C-D24-10/1090

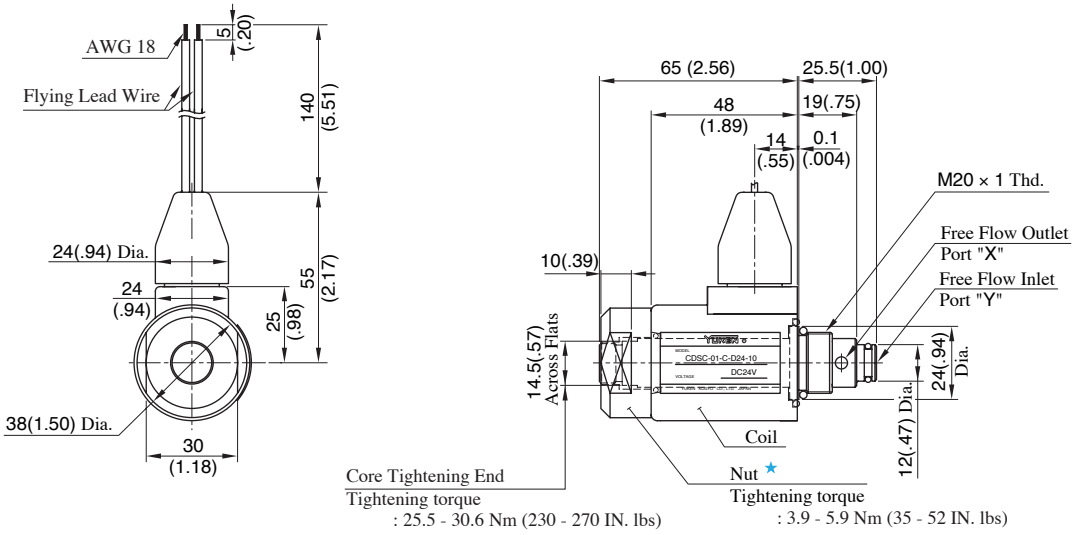

DIMENSIONS IN MILLIMETRES (INCHES)

Details of Mounting Holes

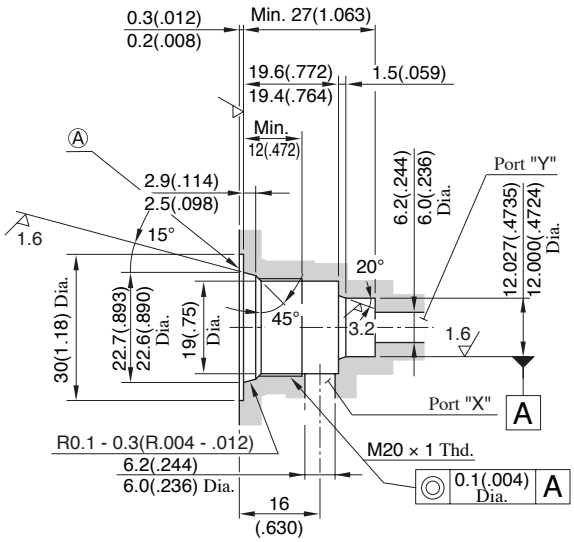

Note: The fitting portion of o-rings should have a good machined finish.

How to Mount

When mounting, the following steps must be followed:

1. Loosen the nut★, then remove the coil.
2. Thread the cartridge, making sure that the collar 24 (.94) Dia. of the cartridge is well fitted to the component surface (Ⓐ surface in the left drawing).
3. Attach the coil and secure it with a nut.

CDSC-03-C-A∗-21/2190

Models with AC Solenoids

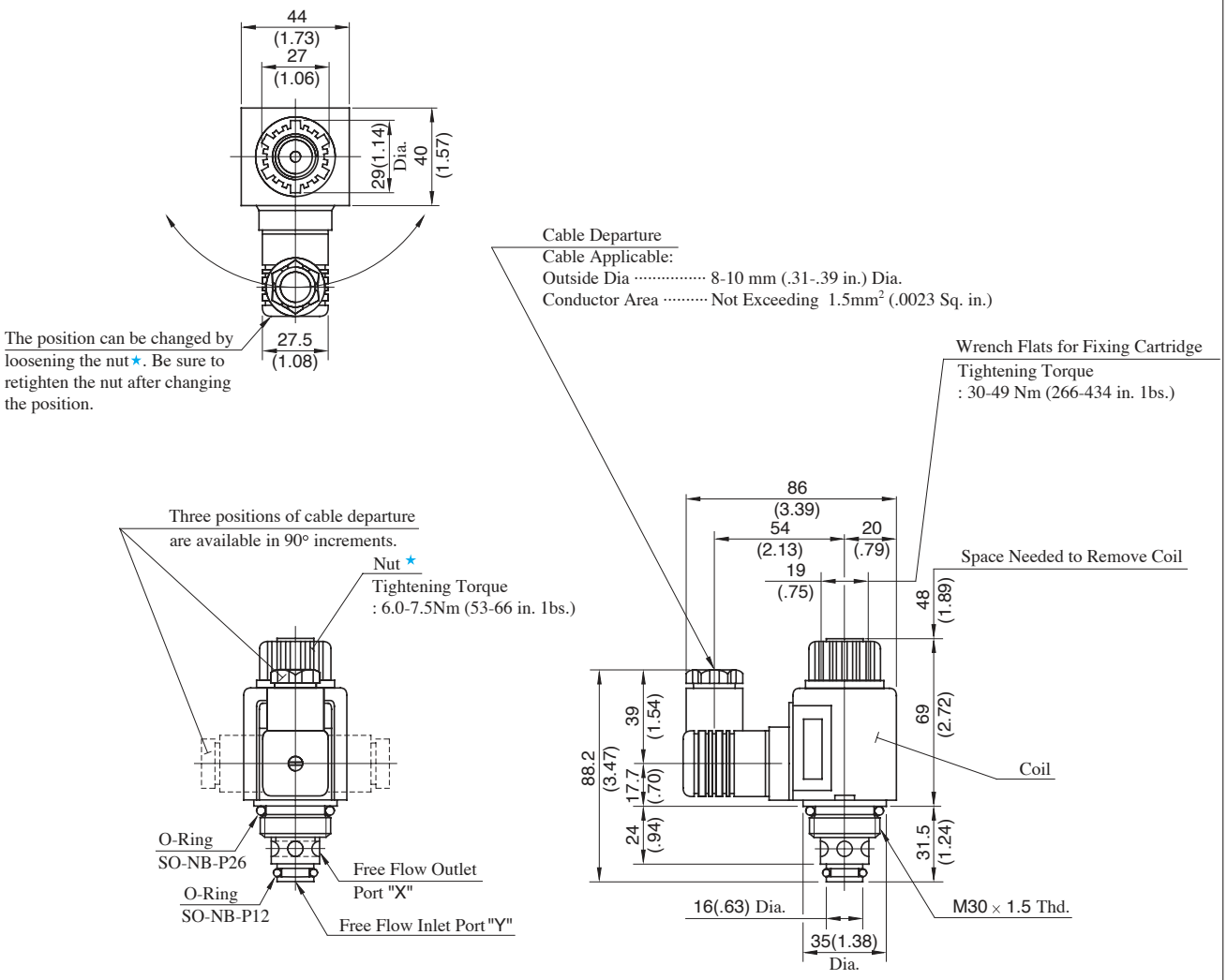

DIMENSIONS IN MILLIMETRES (INCHES)

Details of Mounting Holes

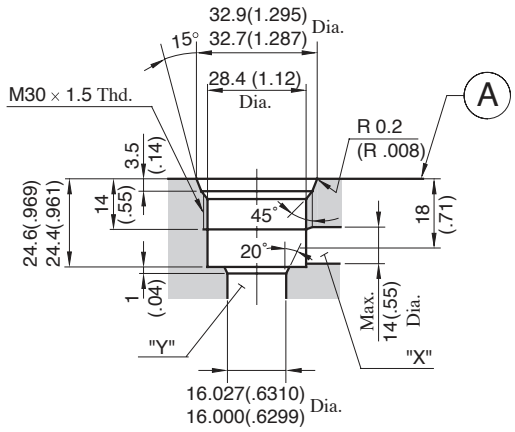

How to Mount

When mounting, the following steps must be followed:

1. Loosen the nut★, then remove the coil.
2. Thread the cartridge, making sure that the collar 35 (1.38) Dia. of the cartridge is well fitted to the component surface (Ⓐ surface in the left drawing).
3. Attach the coil and secure it with a nut.

Note: The fitting portion of O-rings should have a good machined finish.

CDSC-03-C-D∗-21/2190

Models with DC Solenoids

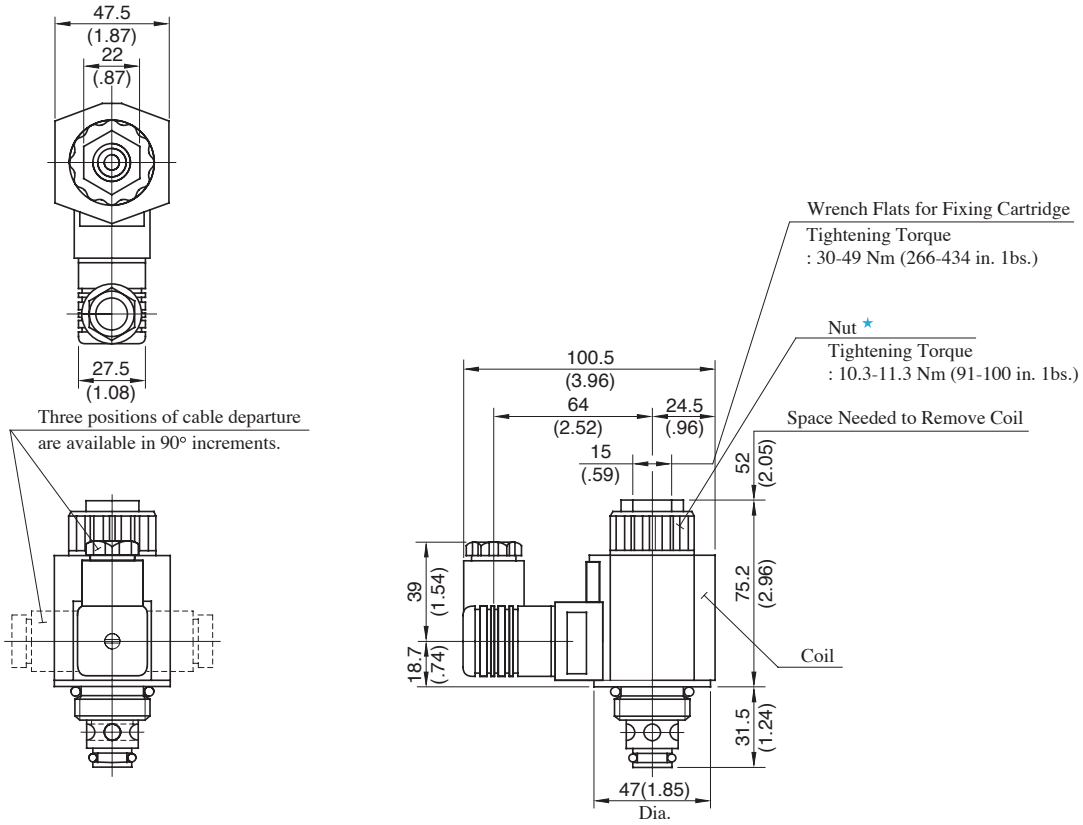

For other dimensions, refer to the "Models with AC Solenoids".

DIMENSIONS IN MILLIMETRES (INCHES)

CDSC-03-C-R∗-21/2190

Models with R Type Solenoids

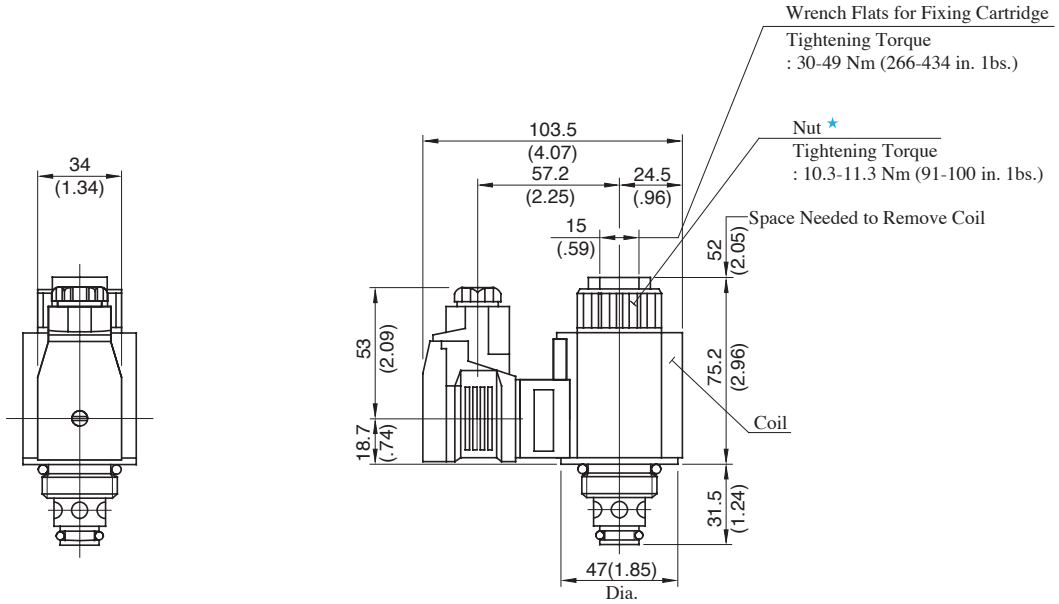

For other dimensions, refer to the "Models with AC Solenoids".

CDST-03, 03W-C-∗-21/2180/2190

Models with AC Solenoids

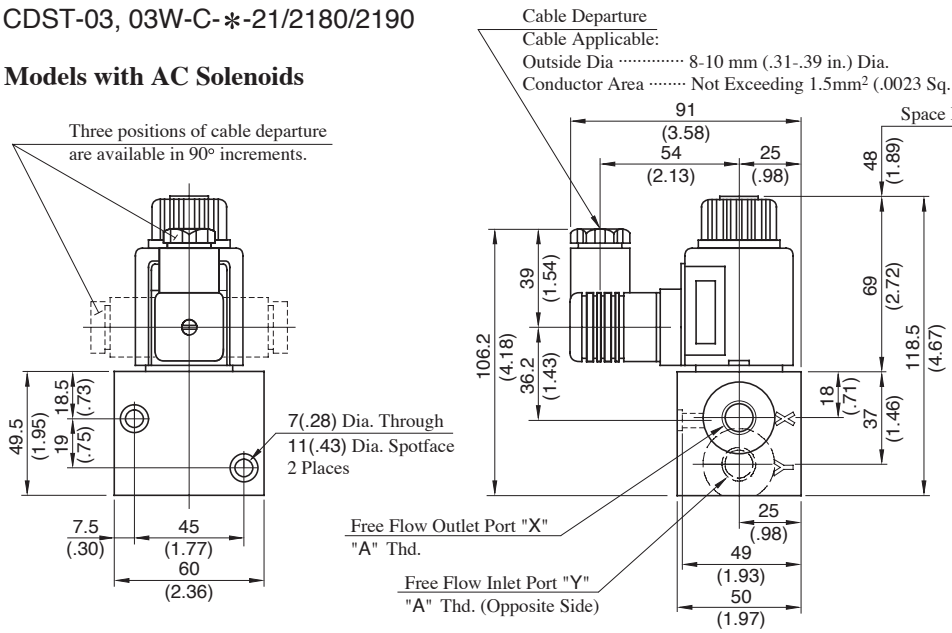

Model Numbers	"A" Thd.
CDST-03W-C-∗-21	Rc 1/4
CDST-03-C-∗-21	Rc 3/8
CDST-03W-C-∗-2180	1/4 BSP.F
CDST-03-C-∗-2180	3/8 BSP.F
CDST-03W-C-∗-2190	1/4 NPT
CDST-03-C-∗-2190	3/8 NPT

Note: The position of cable departure can be changed. For the detail, refer to CDSC-03 on the previous page.

Models with DC Solenoids

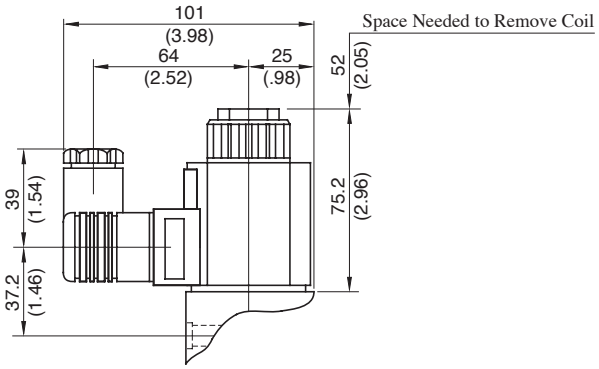

Models with R Type Solenoids

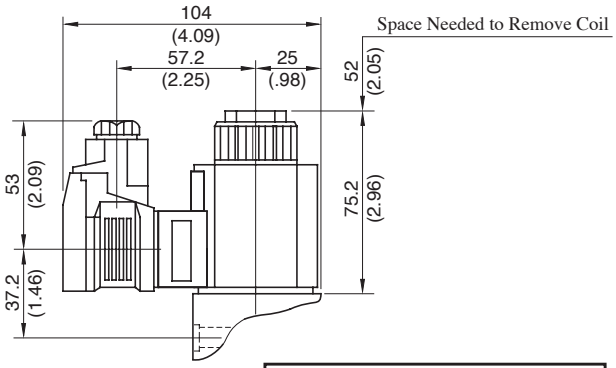

For other dimensions, refer to the "Models with AC Solenoids".

DIMENSIONS IN MILLIMETRES (INCHES)

CDSG-03-C-∗-21/2190

Models with AC Solenoids

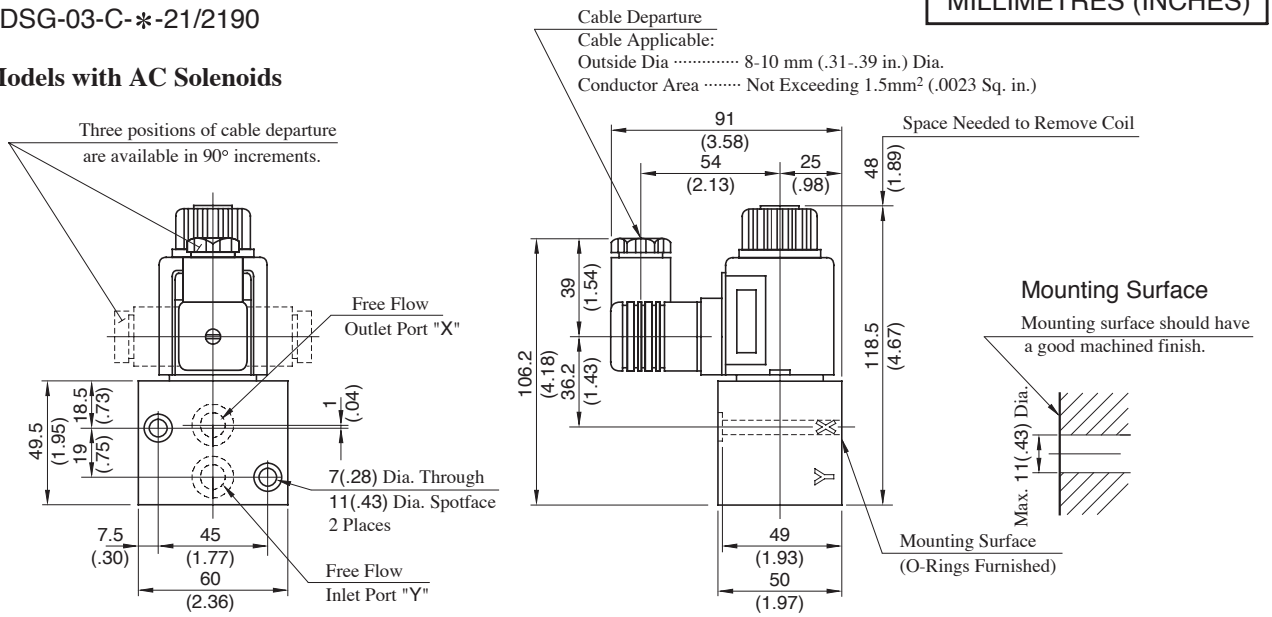

Note 1: For models with DC solenoids and models with R type solenoids, refer to CDST-03, 03W.
2: The position of cable departure can be changed. For the detail, refer to CDSC-03 on the previous page.

List of Seals and Coil Ass'y

CDSC-01-C-D24-10/1090

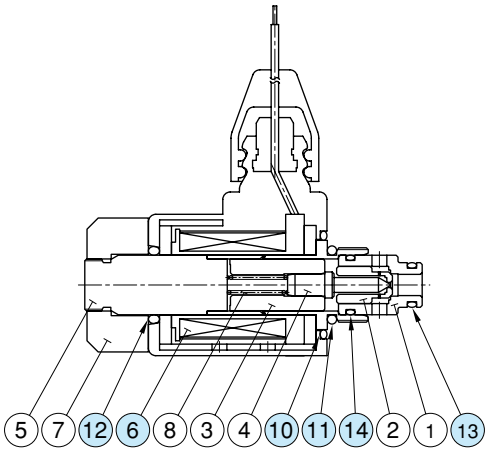

Item	Name of Parts	Part Numbers	Qty.	Seal Kit Numbers
6	Coil Ass'y	2697-VK317470-3	1	————
10	O-Ring	TK280163-7	1	KS-CDSC-01-10
11	O-Ring	SO-NB-P18	1	
12	O-Ring	SO-NB-P16	1	
13	O-Ring	SO-NB-P9	1	
14	O-Ring	SO-NB-A014	1	

Note: When ordering the seals, please specify the seal kit number.

List of Seals, Solenoid Ass'y, Coil Ass'y and Connector Ass'y

CDST-03∗-C-∗-21/2180/2190
CDSC-03-C-∗-21/2190
CDSG-03-C-∗-21/2190

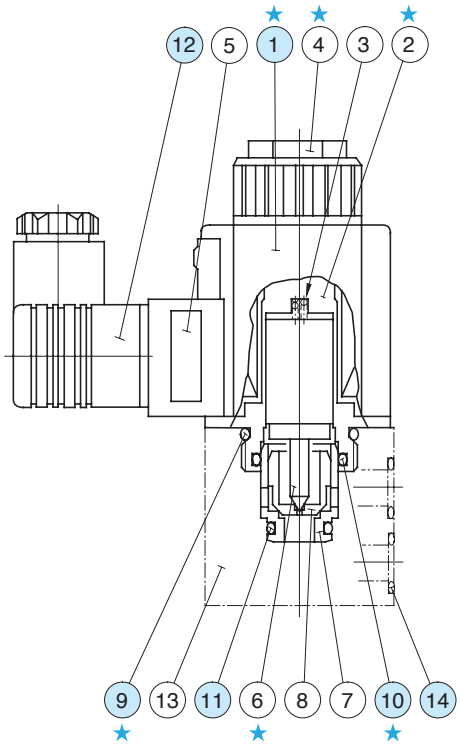

Solenoid assembly is composed of the parts marked with ★.

List of Seals

Item	Name of Parts	Part Numbers	Qty.	Remarks
9	O-Ring	SO-NB-P26	1	———
10	O-Ring	SO-NB-P20	1	———
11	O-Ring	SO-NB-P12	1	———
14	O-Ring	SO-NB-A014	2	only for CDSG

Note: When ordering the seals, please specify the seal kit number from the table right.

List of Seal Kits

Valve Model Numbers	Seal Kit Numbers
CDSC-03-C-∗-21∗	KS-CDSC-03-20
CDST-03∗-C-∗-21∗	
CDSG-03-C-∗-21∗	KS-CDSG-03-20

Solenoid Ass'y, Coil Ass'y and Connector Ass'y No.

Valve Model No.	Solenoid Ass'y No.	① Coil No.	⑫ Connector Ass'y No.
CDS∗-03∗-C-A100	CSA1-100-20	C-CSA1-100-20	GDM-211-B-11
CDS∗-03∗-C-A120	CSA1-120-20	C-CSA1-120-20	
CDS∗-03∗-C-A200	CSA1-200-20	C-CSA1-200-20	
CDS∗-03∗-C-A240	CSA1-240-20	C-CSA1-240-20	
CDS∗-03∗-C-D12	CSD1-12-20	C-SD1-12-50	GDM-211-B-11
CDS∗-03∗-C-D24	CSD1-24-20	C-SD1-24-50	
CDS∗-03∗-C-D48	CSD1-48-20	C-SD1-48-50	
CDS∗-03∗-C-R100	CSR1-100-20	C-SR1-100-50	GDME-211-R-B-10
CDS∗-03∗-C-R200	CSR1-200-20	C-SR1-200-50	

Change of supply voltage

The supply voltage can be changed by replacing the coil.

Interchangeability between Current and New Design

Because of solenoid assembly improvements, CDS∗-03∗ has been model-changed (design 20 to design 21).

Specifications and Characteristics

There are no changes in the specifications and characteristics of the valves themselves.

Solenoid Ratings

There are changes in the inrush current, holding current and power as shown below. No other changes.

Electric Source	Coil Type	Frequency (Hz)	Voltage (V)		Current & Power at Rated Voltage					
			Source Rating	Serviceable Range	Inrush (A)		Holding (A)		Power (W)	
					New	Current	New	Current	New	Current
AC	A100	50	100	80 - 110	1.12	1.30	0.55	0.52	—	—
		60	100	90 - 120	0.95	1.08	0.40	0.39		
			110		0.86	1.19	0.36	0.47		
	A120	50	120	96 - 132	0.93	1.08	0.46	0.45		
		60		108 - 144	0.79	0.98	0.33	0.33		
	A200	50	200	160 - 220	0.56	0.65	0.28	0.27		
		60	200	180 - 240	0.48	0.54	0.20	0.20		
			220		0.43	0.59	0.18	0.24		
	A240	50	240	192 - 264	0.47	0.55	0.23	0.23		
		60		216 - 288	0.40	0.45	0.17	0.17		
DC (K Series)	D12	—	12	10.8 - 13.2	—	—	2.20	2.40	26	29
	D24		24	21.6 - 26.4			1.10	1.20		
	D48		48	43.2 - 52.8			0.55	0.60		
AC→DC Rectified	R100	50/60	100	90 - 110	—	—	0.30	0.32	26	29
	R200		200	180 - 220			0.15	0.17		

Interchangeability in Installation

AC Solenoids

Most items of mounting are interchangeable except the dimensions as shown below. In addition, the size of the spanner (core end faces) for locking the CDSC cartridges has been changed to 15-19 mm across flats.

Current: Design 20

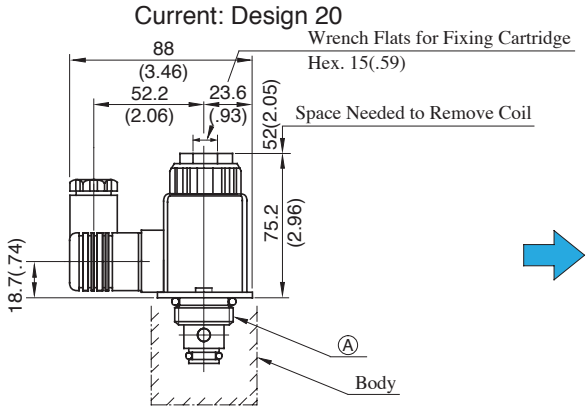

New: Design 21

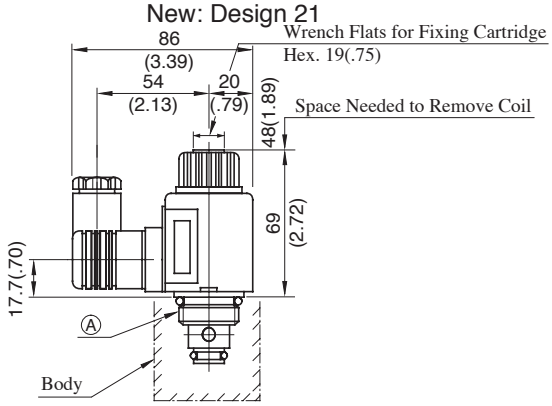

DC/R Type Solenoids

Most items of mounting are interchangeable except the dimensions as shown below. The solenoid shape changed from circular to hexagonal. No change in the size 15 mm of the spanner for locking cartridges.

Current: Design 20

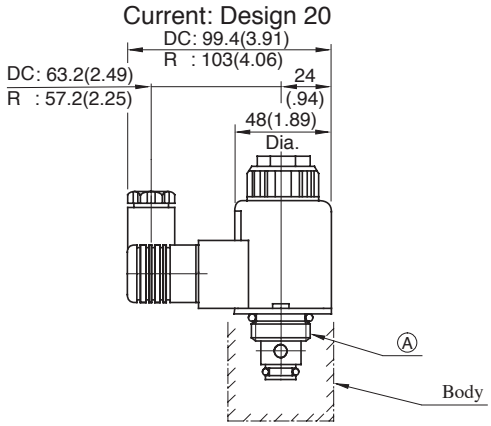

New: Design 21

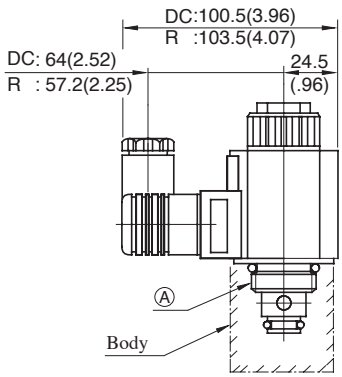

Note: The above drawings give illustrations for the cartridge type. The dimension Ⓐ at the mounting section remains unchanged. In case of the Thread Connection Type and Gasket Mounting Type, a body is mounted to the hatched section. The dimensions of the body remain unchanged.